SANITATION FACILITIES CONSTRUCTION
PUBLIC LAW 86-121 I.H.S.
PROJECT NOS. AL-23-C77 AND AL-24-D33
2024 SCATTERED HOUSING PUEBLO OF SAN ILDEFONSO
SAN ILDEFONSO INDIAN RESERVATION, NEW MEXICO

CONSTRUCTION DRAWINGS

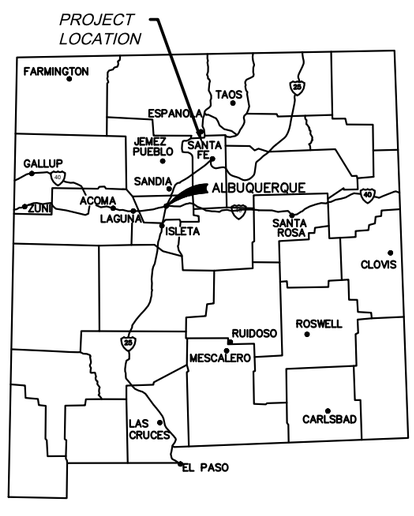

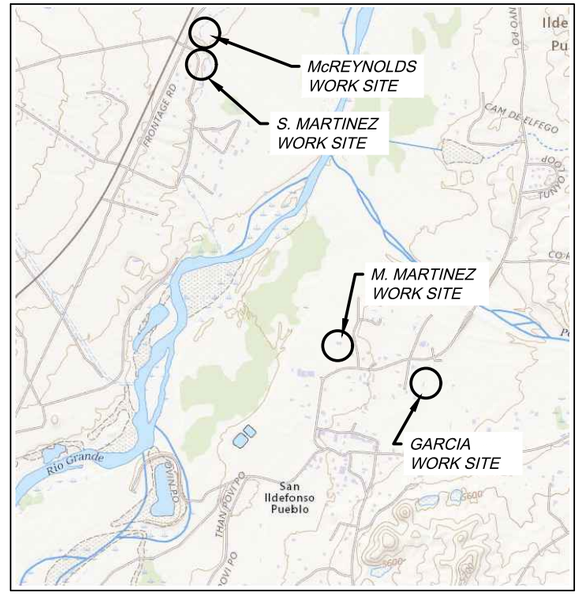

VICINITY MAP

SHEET INDEX

NO.	SUBJECT
1.	COVER SHEET & LOCATION MAP
2.	NOTES & SYMBOLS
3.	GARCIA PROPERTY PLAN & PROFILE VIEWS (SCHEDULE A)
4.	M. MARTINEZ PROPERTY PLAN & PROFILE VIEWS (SCHEDULE B)
5.	McREYNOLDS PROPERTY PLAN & PROFILE VIEWS (SCHEDULE C)
6.	S. MARTINEZ PROPERTY PLAN & PROFILE VIEWS (SCHEDULE D)
7.	CONSTRUCTION STANDARD DETAILS
8.	CONSTRUCTION STANDARD DETAILS
9.	CONSTRUCTION STANDARD DETAILS

APPROVED:

WESTEN KNUDSEN, P.E. DATE
DISTRICT ENGINEER, SFDO/OEHE/DSFC

Thomas M. Slocum -S
Digitally signed by Thomas M. Slocum -S
Date: 2025.01.30 14:53:41 -07'00'

THOMAS M. SLOCUM
STATE OF WASHINGTON
34003
REGISTERED
PROFESSIONAL ENGINEER

DATE	REVISIONS	INIT.

INDIAN HEALTH SERVICE
OFFICE OF ENVIRONMENTAL HEALTH & ENGINEERING

SANITATION FACILITIES CONSTRUCTION
1700 CERRILLOS ROAD
SANTA FE, NM 87505
(505) 946-9570

INDIAN HEALTH SERVICE - SHF - 1955

2025 Individual Wastewater Disposal Facilities
SAN ILDEFONSO PUEBLO
COVER SHEET
PUBLIC LAW 86-121
AL-23-C77 and AL-24-D33

DRAWN BY: T Slocum, 12-24 FILE NAME:
CHECKED BY: LAYOUT NAME:
APPROVED BY: W Knudsen, 1-24 PROJ ENG: T Slocum SCALE:

SHEET 1 OF 9

USER: tslocum FILE: N:\SFC\Tribes\San Ildefonso\00 - Open IHS Projects\23-C77 - 2023 Scattered Housing\Individual Homes\Lillian Garcia\Design and Drawings\23-C77 Garcia Plans.dwg 1/30/2025 - 11:58

USER: tslocum FILE: N:\SFC\Tribes\San Ildefonso\00 - Open IHS Projects\23-C77 - 2023 Scattered Housing\Individual Homes\Lillian Garcia\Design and Drawings\23-C77 Garcia Plans.dwg 1/30/2025 -

GENERAL NOTES

1. THE LOCATIONS OF UTILITIES SHOWN IN PLAN AND PROFILE DRAWINGS ARE BASED ON AVAILABLE RECORDS AND FIELD OBSERVATIONS, BUT ARE NOT WARRANTED TO BE ACCURATE. ADDITIONAL UTILITIES MAY BE PRESENT, BUT NOT SHOWN ON THE PLANS. THE CONTRACTOR SHALL BE RESPONSIBLE FOR CONFIRMING THE LOCATIONS AND ELEVATIONS OF ALL UTILITIES. ALL UTILITIES SHALL BE NOTIFIED AT LEAST 72 HOURS PRIOR TO EXCAVATION. THE CONTRACTOR SHALL REQUEST "NEW MEXICO ONE CALL" SERVICE NO SOONER THAN 48 HOURS PRIOR TO COMMENCEMENT OF THE WORK. ANY DAMAGE TO EXISTING UTILITIES DURING CONSTRUCTION IS THE RESPONSIBILITY OF THE CONTRACTOR AND SHALL BE REPAIRED AT NO ADDITIONAL EXPENSE TO THE OWNER.
2. ALL MINOR OBSTRUCTIONS MAY NOT BE SHOWN ON PLANS. THE CONTRACTOR SHALL VISIT THE SITE AND DETERMINE THE ACTUAL CONDITIONS WITH REGARD TO THE EXISTENCE OF FENCES, DRIVEWAYS, TREES, SIDEWALKS, CULVERTS, UTILITIES AND OTHER MISCELLANEOUS OBSTACLES THAT MAY INTERFERE WITH CONSTRUCTION PRIOR TO SUBMITTING BIDS.
3. PRIOR TO CONSTRUCTION, THE CONTRACTOR SHALL EXCAVATE & VERIFY THE HORIZONTAL & VERTICAL LOCATIONS OF ALL POTENTIAL CONFLICTS. ALL ELECTRICAL, TELEPHONE, CABLE TV, GAS AND OTHER UTILITY LINES, CABLES & APPURTENANCES ENCOUNTERED DURING CONSTRUCTION THAT REQUIRE RELOCATION SHALL BE COORDINATED WITH THAT UTILITY. THE CONTRACTOR SHALL COORDINATE ALL NECESSARY UTILITY ADJUSTMENTS. SHOULD A CONFLICT EXIST, THE CONTRACTOR AND ENGINEER SHALL RESOLVE.
4. SYMBOLS ON THE DRAWINGS (BECAUSE OF THEIR SIZE) MAY NOT REPRESENT THE EXACT LOCATION OF EITHER PROPOSED OR EXISTING UTILITIES. (EX. GATE VALVES & HYDRANTS)
5. THE CONTRACTOR SHALL ABIDE BY ALL TRIBAL, LOCAL, STATE, AND FEDERAL LAWS, RULES AND REGULATIONS WHICH APPLY TO THE CONSTRUCTION, AND SHALL OBTAIN ALL NECESSARY PERMITS PRIOR TO COMMENCING CONSTRUCTION.
6. CONTRACTOR SHALL PROTECT ALL EXISTING SITE FEATURES THAT ARE TO REMAIN FROM DAMAGE DURING ALL PROJECT WORK..
7. THE CONTRACTOR SHALL COORDINATE WITH SAN ILDEFONSO PUEBLO ON WORK SCHEDULING, TRAFFIC CLOSURES AND UTILITY INTERRUPTIONS AS NEEDED.
8. THE CONTRACTOR SHALL PERFORM ALL WORK IN ACCORDANCE WITH THE TERMS AND CONDITIONS DESCRIBED IN THE CONTRACT GENERAL CONDITIONS AND ANY SUPPLEMENTAL CONDITIONS, AND IN ACCORDANCE WITH THE TECHNICAL PROVISIONS (TP) FOR THE PROJECT. THE RELEVANT TECHNICAL PROVISIONS ARE INCLUDED IN THE PROJECT MANUAL AND ARE CONSIDERED PART OF THE CONTRACT. IF THE CONTRACTOR FINDS CONFLICTING INFORMATION IN THE CONSTRUCTION DOCUMENTS, THE CONTRACTOR SHALL IMMEDIATELY CONTACT THE ENGINEER FOR CLARIFICATION.
9. CLEARING OF VEGETATION, IF REQUIRED, SHALL INCLUDE REMOVING STUMPS AND ALL OTHER STANDING MATERIAL FROM PROTRUDING FROM THE GROUND. ALL MATERIAL REMOVED SHALL BE DISPOSED OF BY THE CONTRACTOR. ALL COSTS ASSOCIATED WITH THIS WORK SHALL BE INCIDENTAL, UNLESS LISTED AS A SPECIFIC BID ITEM.
10. WATER FOR CONSTRUCTION IS AVAILABLE FROM SAN ILDEFONSO PUEBLO AT RATES APPROVED IN THE CONTRACT. THE CONTRACTOR SHALL PROVIDE ALL PIPING, CONNECTIONS, AND METER NECESSARY TO GET WATER FROM A CONNECTION OR OTHER WATER SOURCE. CONTRACTOR TO COORDINATE WITH SAN ILDEFONSO PUEBLO TO DETERMINE LOCATIONS OF WATER SOURCE(S).
11. BASE COURSE OR OTHER SURFACING MATERIAL (GRAVEL), REMOVED FROM ROADWAYS DURING CONSTRUCTION SHALL BE RETURNED OR REPLACED TO ITS ORIGINAL CONDITION OR BETTER. COST OF GRAVEL OR BASE COURSE MATERIAL SHALL BE INCIDENTAL TO CONTRACT UNLESS OTHERWISE NOTED IN THE BID SCHEDULE AND SPECIFICATIONS.
12. PROVISIONS FOR ADEQUATE PROTECTION, AND SEPARATION OF WORK AREAS FROM THE GENERAL PUBLIC ARE THE RESPONSIBILITY OF THE CONTRACTOR. NO WORK SHALL BE LEFT UNCOVERED OVERNIGHT EXCEPT ENDS OF PIPES FROM THE PREVIOUS DAY'S WORK.
13. CONSTRUCTION ACTIVITY SHALL BE LIMITED TO R.O.W. OR TEMPORARY CONSTRUCTION EASEMENTS. DAMAGE TO ANY ADJACENT PROPERTIES RESULTING FROM THE CONSTRUCTION PROCESS IS THE RESPONSIBILITY OF THE CONTRACTOR.
14. OVERNIGHT PARKING OF CONSTRUCTION EQUIPMENT SHALL OCCUR ONLY IN AREAS DESIGNATED BY THE TRIBE AND SHALL NOT OBSTRUCT DRIVEWAYS OR DESIGNATED TRAFFIC LANES.
15. ALL EXCAVATION, TRENCHING, AND SHORING ACTIVITIES MUST BE CARRIED-OUT IN ACCORDANCE WITH OSHA 29 CFR 1926 SUBPART P.
16. ALL R.O.W, PROPERTY, AND EASEMENT LINES SHOWN HEREIN AS "APPROXIMATE BOUNDARY" ARE APPROXIMATE AND WERE DEVELOPED FROM DOCUMENTS OF RECORD AND NO FIELD SURVEY WAS PERFORMED. THE INFORMATION SHOWN IS NOT FROM A BOUNDARY/RIGHT OF WAY SURVEY AND ALL BOUNDARY LINES SHOWN HEREIN ARE FOR INFORMATION ONLY.
17. CONTRACTOR SHALL TAKE NECESSARY MEASURES TO ENSURE THE PRESERVATION OF SURVEY MONUMENTS / MARKERS / BENCHMARKS. CONTRACTOR SHALL NOT DISTURB PERMANENT SURVEY MONUMENTS WITHOUT THE CONSENT OF TRIBE, SHALL NOTIFY I.H.S. AND BEAR THE EXPENSE OF REPLACING ANY THAT MAY BE DISTURBED. ALL MONUMENTS SHALL BE REESTABLISHED BY A NEW MEXICO LICENSED SURVEYOR.
18. ALL FIELD MATERIAL TESTING FOR THE PURPOSE OF ACCEPTANCE SHALL BE PERFORMED IN ACCORDANCE WITH THE TECHNICAL PROVISIONS.
19. THESE DRAWINGS DO NOT INCLUDE NECESSARY COMPONENTS FOR CONSTRUCTION SAFETY AND HEALTH WHICH SHALL REMAIN THE RESPONSIBILITY OF THE CONTRACTOR.
20. THE CONTRACTOR SHALL MAINTAIN AN UP-TO-DATE SET OF RECORD DRAWINGS FOR THE PROJECT. CONTRACTOR SHALL SUBMIT ACCURATE, DETAILED AND COMPLETE "AS-BUILT" RECORD DRAWINGS OF THE FINAL CONSTRUCTION UPON COMPLETION OF THE WORK, PRIOR TO FINAL PAYMENT.
21. IF ANY ARCHAEOLOGICAL ARTIFACTS OR BURIED HUMAN REMAINS ARE FOUND DURING CONSTRUCTION, WORK IN THE VICINITY OF THE FINDING SHALL CEASE AND THE CONTRACTOR SHALL IMMEDIATELY NOTIFY IHS' AND SAN ILDEFONSO PUEBLO'S PROJECT REPRESENTATIVES, NO LATER THAN 24-HOURS.

SPECIFIC TECHNICAL NOTES

1. THE LOCATIONS OF THE VARIOUS ON-SITE SEWAGE TREATMENT FACILITIES AND PIPING THAT ARE SHOWN ON THE PLANS HAVE NOT BEEN SURVEYED. THE CONTRACTOR MAY MAKE MINOR CHANGES TO THE AS-BUILT LOCATIONS TO ACCOUNT FOR SITE CONDITIONS, PROVIDED THAT THEY COMPLY WITH THE SETBACK REQUIREMENTS THAT ARE INCLUDED IN THE SITE PLANS. IHS WILL PROVIDE ONE OR MORE VERTICAL CONTROL POINTS AT EACH CONSTRUCTION SITE CONSISTENT WITH THE ELEVATIONS SHOWN ON THE PROFILE VIEWS. THE CONTRACTOR SHALL SURVEY OFFSETS FROM THE CONTROL POINTS AS NEEDED TO ENSURE THE FACILITIES ARE INSTALLED AT THE DESIGN GRADES AND ELEVATIONS SHOWN ON THE PLANS.

CONTACTS

PROJECT OWNER:
PUEBLO OF SAN ILDEFONSO
2 TUNYO PO
SANTA FE, NM 87506
CONTACT: TOM GARCIA,
FACILITIES DIRECTOR
505-455-4132

ENGINEER:
TOM SLOCUM, PE
INDIAN HEALTH SERVICE
DIV. OF SANITATION FACILITIES CONSTRUCTION
SANTA FE SERVICE UNIT
1700 CERRILLOS ROAD
SANTA FE, NM. 87505
505-946-9583

LEGEND

PROPOSED		EXISTING
	SEWER	
S	SEWER MAIN	S
SSL	SEWER SERVICE LINE	SSL
SFM	SEWER FORCE MAIN	SFM
SFSL	SEWER FORCE SERVICE LINE	SFSL
	SEWER MANHOLES	
	ONE-WAY CLEANOUT	
	TWO-WAY CLEANOUT	
	SEPTIC TANK	
	LIFT STATION	
	WATER	
W	WATER MAIN	W
WSL	WATER SERVICE LINE	WSL
	GATE VALVES	
	FIRE HYDRANT W/VALVE	
	FLUSH HYDRANT W/VALVE	
	AV/ARV	
	SADDLE W/CORPORATION STOP	
	CURB STOP W/BOX	
	INDIVIDUAL PRESSURE RELEASE VALVE	
	YARD HYDRANT	
	METER PIT/BOX	
	IN-GROUND PRESSURE TANK	
	WELL	

	GENERAL
B.M.	BENCHMARK
	IRON PIN
1234	EXISTING CONTOUR
2345	PROPOSED CONTOUR
	CULVERT
	DIRECTIONAL DRILLING
	FENCE
FO	FIBER OPTIC
G E T	GAS, ELECTRIC, TELEPHONE
	LIGHT POLE
	INSULATION
	POWER POLE
	PROPANE TANK
	PROPERTY LINE
	RIGHT-OF-WAY
	ROAD (DIRT/GRAVEL)
	ROAD (PAVED)
	ROAD BORING/CROSSING
	SIGN
B.H.	SOIL BORING
	SWAMP
TP	TELEPHONE PED
TW	TRACING WIRE BOX
	TREE LINE
	TREE
	UTILITY RIGHT OF WAY
	WASH CROSSING
	RIP RAP
CP	CONTROL POINT
EPED	ELECTRIC PED
	FENCE CORNER
	GUY / ANCHOR
	MONUMENT
MW	MONITORING WELL
TBM	TEMPORARY BENCHMARK
	TANK
CATV	CATV PEDESTALS
	FLOW DIRECTION

DATE	REVISIONS	INIT.

INDIAN HEALTH SERVICE
OFFICE OF ENVIRONMENTAL HEALTH & ENGINEERING

SANITATION FACILITIES CONSTRUCTION
1700 CERRILLOS ROAD
SANTA FE, NM 87505
(505) 946-9570

INDIAN HEALTH SERVICE - SFS - 1955

2025 Individual Wastewater Disposal Facilities
San Ildefonso Pueblo
NOTES & LEGEND
PUBLIC LAW 86-121
AL-23-C77 & AL--24-033

DRAWN BY: T Slocum, 12-24 FILE NAME:
CHECKED BY: LAYOUT NAME:
APPROVED BY: PROJ ENG: T Slocum SCALE:

Profile View 2H:1V Distortion

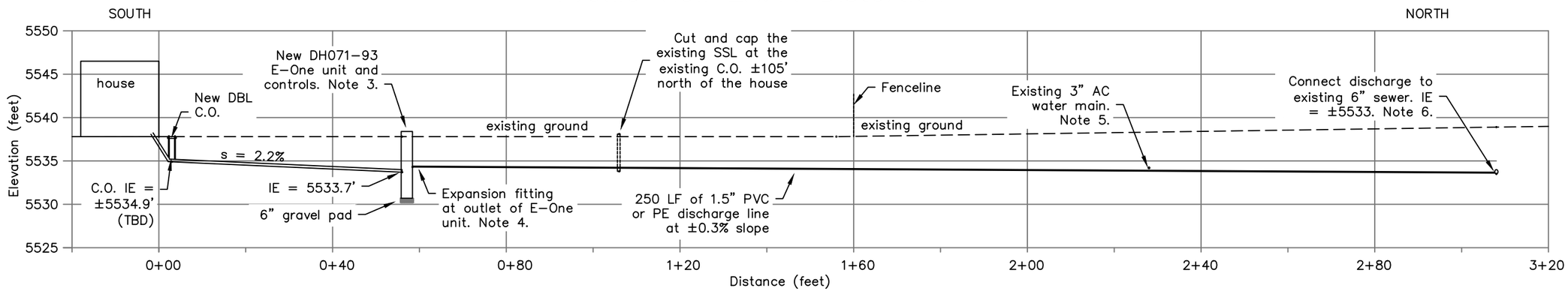

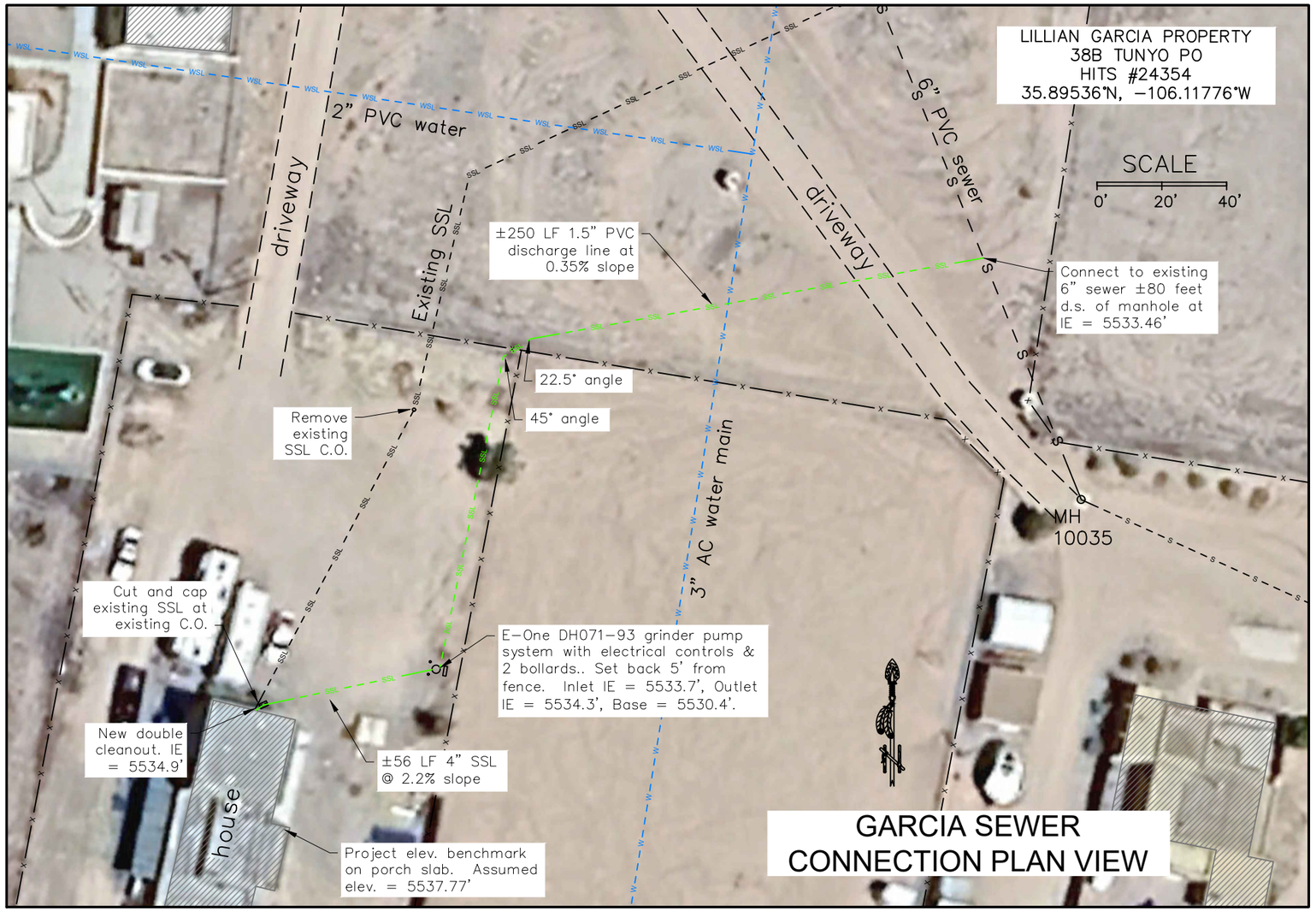

Notes

1. The system shall be constructed per applicable provisions of IHS TP-13 "Individual Pressure-Dosed Sewage Disposal System." Refer to Detail sheets for details on system components.

2. Install new 4" SSL from the existing house stub-out at minimum 2% slope. Contractor to verify existing stub-out invert elevation (IE).

3. Install a DH071-93 E-One grinder pump unit or equivalent and controls per manufacturer's specs. IE of outlet = 5533.7', IE outlet = 5534.3. Contractor may vary elevations to allow for a min. 2% slope on the inlet SSL. Install power supply and pump controls per TP-1304 and vendor's specs (see Detail Sheet). Set the control panel as shown, about 50 LF from the house connection.

4. Install a 1.25" to 1.5" expansion fitting at the outlet of the E-One unit and connect to 1.5" effluent line.

5. Approx. location of water main is shown. Location & depth to be verified by the contractor. Place concrete around effluent line if it crosses above the water main.

6. Connect the discharge line to the existing 6" sewer lateral. Assumed IE at connection = 5533.5'.

7. The project elevation benchmark is the NE corner of the house porch slab. Assumed elev. = 5537.77'. The contractor shall survey additional benchmarks as needed for project construction.

DATE	REVISIONS	INIT.

INDIAN HEALTH SERVICE
OFFICE OF ENVIRONMENTAL HEALTH & ENGINEERING

SANITATION FACILITIES CONSTRUCTION
1700 CERRILLOS ROAD
SANTA FE, NM 87505
(505) 946-9570

INDIAN HEALTH SERVICE - SHF - 1955

2025 Individual Wastewater Disposal Facilities
San Ildefonso Pueblo
L Garcia Work Site Plan & Profile Views (Sched. A)
PUBLIC LAW 86-121
AL-23 C-77 & AL-24-D33

DRAWN BY: T Slocum 12-24
FILE NAME:
CHECKED BY:
LAYOUT NAME:
APPROVED BY:
PROJ ENG: T Slocum
SCALE: As noted

SHEET 3 OF 9

Notes

1. The system shall be constructed per applicable provisions of IHS TP–12 "Non–aggregate Sewage Disposal Systems" and TP–13 "Individual Pressure–Dosed Sewage Disposal System." Refer to Detail sheets for details on system components.
2. Install a DH071–74 E–One grinder pump unit or equivalent and controls per manufacturer's specs. IE of outlet = 5537.3', IE outlet = 5537.9. Power supply and pump controls to be installed per Detail Sheet and vendor's specs.
3. Connect the discharge line to the existing pump tank near the SE corner of the house. Assumed inlet IE = 5536.2'. The contractor may vary the elevation of the line provided that is has a minimun 1% slope.
4. The project elevation benchmark is the NE corner of the house porch slab. Assumed elev. = 5540.00'. The contractor shall survey additional benchmarks as needed for project construction.

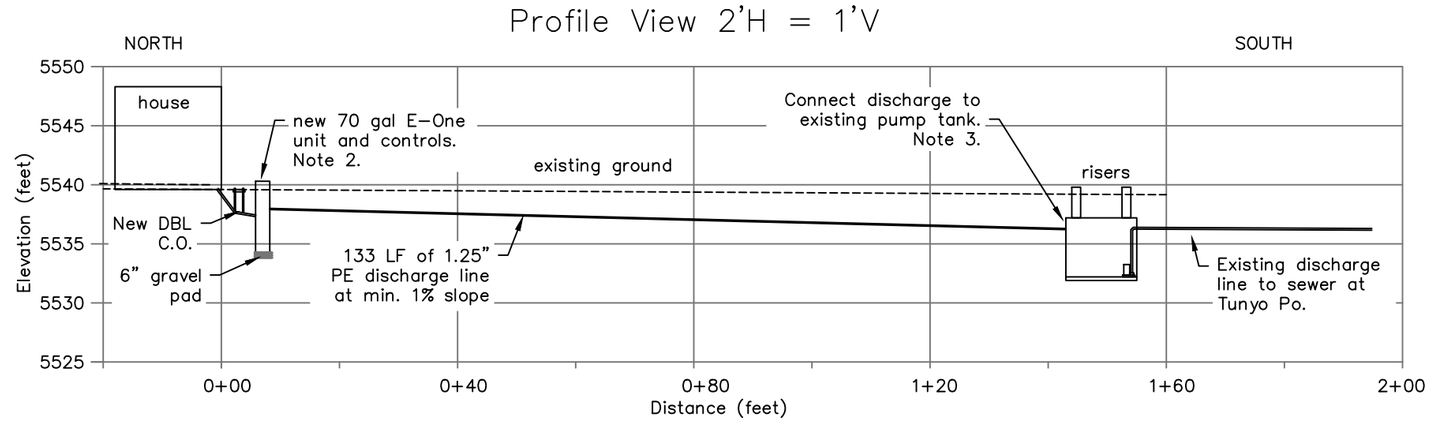

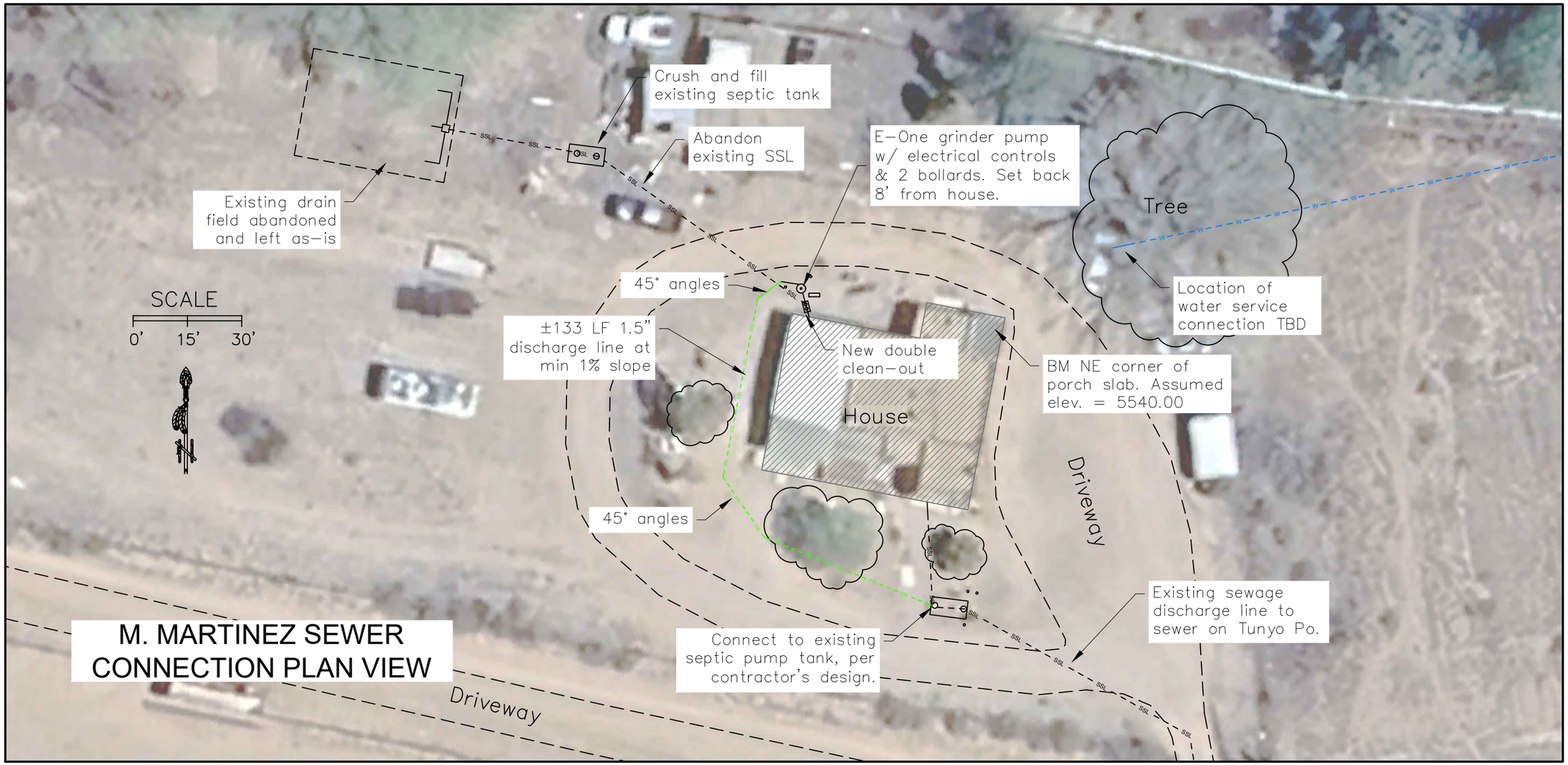

M. MARTINEZ SEWER CONNECTION PLAN VIEW

DATE	REVISIONS	INIT.

INDIAN HEALTH SERVICE
OFFICE OF ENVIRONMENTAL HEALTH & ENGINEERING

SANITATION FACILITIES CONSTRUCTION
1700 CERRILLOS ROAD
SANTA FE, NM 87505
(505) 946–9570

INDIAN HEALTH SERVICE - SHA - 1955

2025 Individual Wastewater Disposal Facilities
M Martinez Work Site Plan & Profile Views (Sched. B)
PUBLIC LAW 86–121
AL–23–C77 & AL–D–35

DRAWN BY: T Slocum 1–25
CHECKED BY:
APPROVED BY:
FILE NAME:
LAYOUT NAME:
PROJ ENG: T Slocum
SCALE: As noted

SHEET 4 OF 9

Profile View 2'H = 1'V

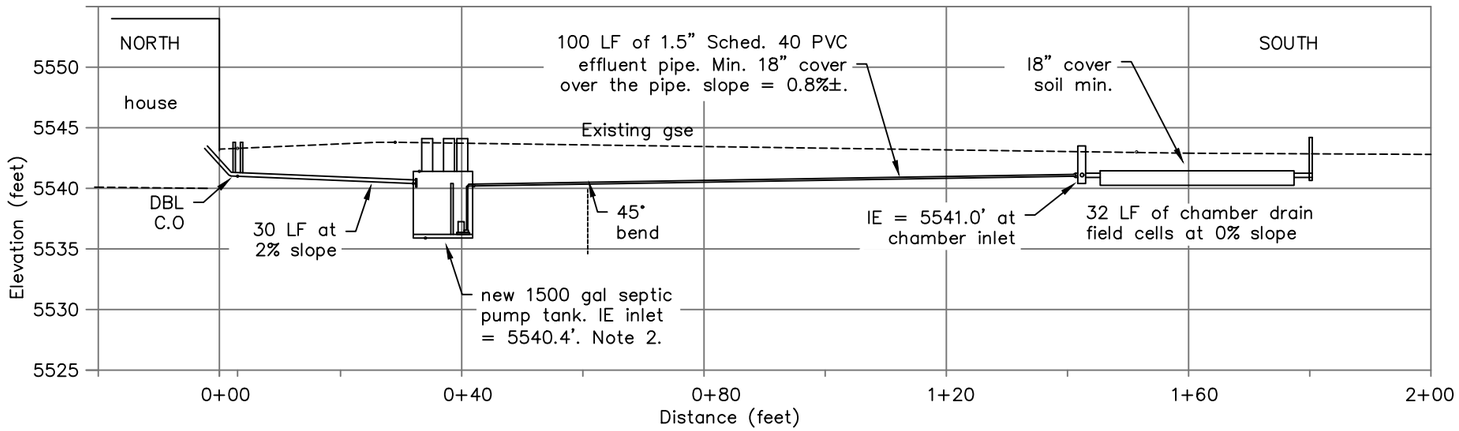

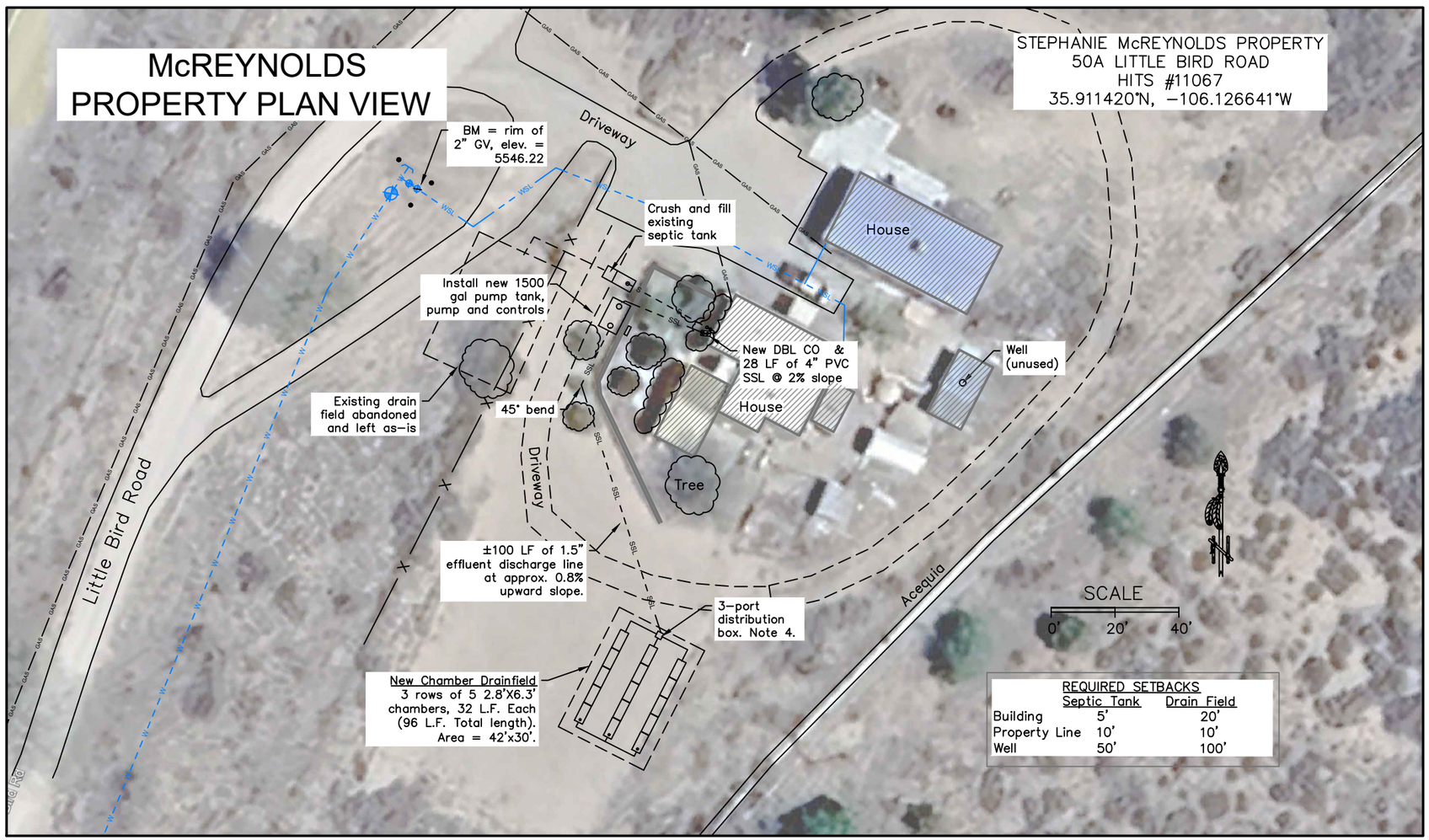

Notes

1. The system shall be constructed per applicable provisions of IHS TP-12 "Non-aggregate Sewage Disposal Systems" and TP-13 "Individual Pressure-Dosed Sewage Disposal System." Refer to Detail sheets for details on system components.

2. The 1500 gallon combination septic & pump tank shall include a 0.5 HP submersible pump, controls and electrical hookup, per Standard Detail #13B.

3. Power supply for pump to be installed per TP-1304. Approx. 75 LF to the house connection.

4. Install a 1.5" to 4" expansion fitting on the pump tank effluent line at the inlet to the standard distribution box. See Detail 12G1.

5. The project elevation benchmark is rim of the 2" gate valve at the north end of the new water main. Elevation = 5546.22. The contractor may vary the elevation of the septic tank provided that the service connection from the house has min. 2% slope.

DATE	REVISIONS	INIT.

INDIAN HEALTH SERVICE
OFFICE OF ENVIRONMENTAL HEALTH & ENGINEERING

SANITATION FACILITIES CONSTRUCTION
1700 CERRILLOS ROAD
SANTA FE, NM 87505
(505) 946-9570

INDIAN HEALTH SERVICE - SFC - 1965

2025 Individual Wastewater Disposal Facilities
San Ildefonso Pueblo
S. McReynolds Site Plan & Profile Views (Sched. C)
PUBLIC LAW 86-121
AL-24-033

DRAWN BY: T Slocum 12-24
CHECKED BY:
APPROVED BY:
FILE NAME:
LAYOUT NAME:
PROJ ENG: T Slocum
SCALE: As noted

SHEET 5 OF 9

Notes

1. The system shall be constructed per applicable provisions of IHS TP–12 "Non–aggregate Sewage Disposal Systems." Refer to Detail sheets for details on system components.
2. The project elevation benchmark is rim of the new 2" gate valve near the fire hydrant at the driveway entrance. Elevation = 5541.66'.
3. Contractor to field verify the invert elev. of the existing house connection. The elev. shown is approximate. Contractor may vary the elevation of the septic tank provided that the service connection from the house has min. 2% slope and discharge line to DF distribution box has min. 1% slope.
4. Minimize damage to existing trees when installing septic tank.

PROFILE VIEW 2'H = 1'V

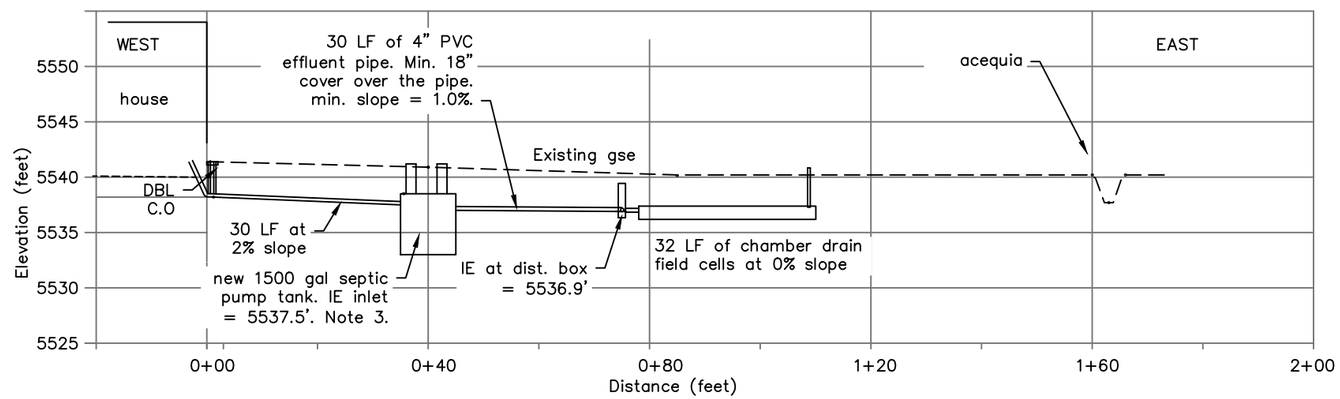

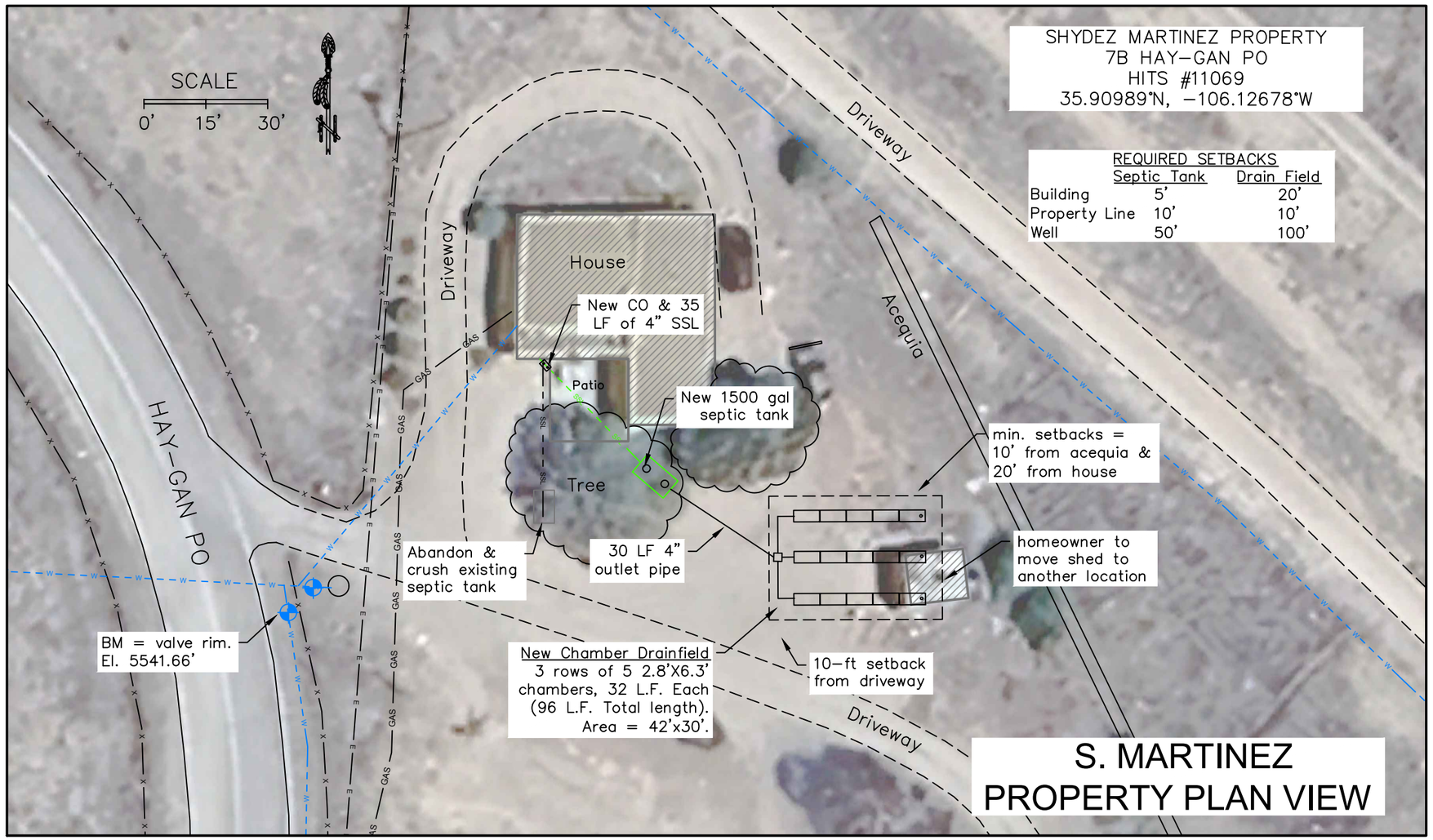

DATE	REVISIONS	INIT.

INDIAN HEALTH SERVICE
OFFICE OF ENVIRONMENTAL HEALTH & ENGINEERING

SANITATION FACILITIES CONSTRUCTION
1700 CERRILLOS ROAD
SANTA FE, NM 87505
(505) 946–9570

INDIAN HEALTH SERVICE - PHS - 1955

2025 Individual Wastewater Disposal Facilities
S Martinez Work Site Plan & Profile Views (Sched. D)
PUBLIC LAW 86–121
AL–23–C77 & AL–24–D33

DRAWN BY: T Slocum 12–24
FILE NAME:
CHECKED BY:
LAYOUT NAME:
APPROVED BY:
PROJ ENG: T Slocum
SCALE: As noted

SHEET 6 OF 9

GRINDER PUMP AND SEWER CONNECTION DETAILS

Contractor to supply two E-One grinder pump systems or equivalent grinder pump systems per approval by the engineer.
Dimensions of the E-One unit for Schedule 1 (Garcia) is DH071-93.
Dimensions for Schedule B (Martinez) is DH071-74

NA0050P02

DH071

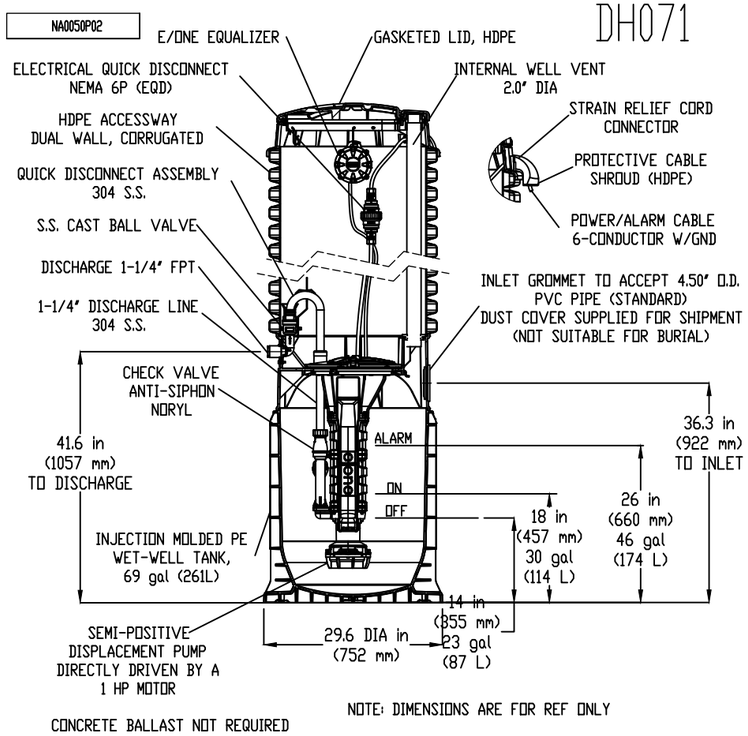

CONCRETE BALLAST NOT REQUIRED

NOTE: DIMENSIONS ARE FOR REF ONLY

FIELD JOINT REQUIRED FOR MODELS DH071-129 / DH071-160

JVL	SGS	7/14/2023	F	1:16
DR BY	CHK'D	DATE	ISSUE	SCALE

e one SEWER SYSTEMS

MODEL DH071 DETAIL SHEET

IHS NOTES:
1. REFER TO E-ONE PRODUCT DRAWINGS IN THE TECHNICAL PROVISIONS FOR DIMENSIONS OF MODELS DH071-74 (MARTINEZ SITE) AND DH071-93 (GARCIA SITE).
2. INSTALL A 1.25" TO 1.5" EXPANSION FITTING AT OUTLET OF E-ONE UNIT TO FIT THE 1.5" EFFLUENT LINE

SIMPLEX SENTRY

REDUNDANT RUN (HIGH LEVEL)
EXTERNAL VISUAL & AUDIBLE ALARM
EXTERNAL LATCHING MANUAL SILENCE
MANUAL RUN
PUMP RUN INDICATOR
CONFORMAL COATED CIRCUIT BOARD
PADLOCK
NEMA 4X ENCLOSURE ASSEMBLY
CORROSION PROOF THERMOPLASTIC POLYESTER APPROVED BY UL FOR ELECTRICAL CONTROL ENCLOSURE

OPTIONS:
☐ ALARM CONTACTS
☐ HOUR METER

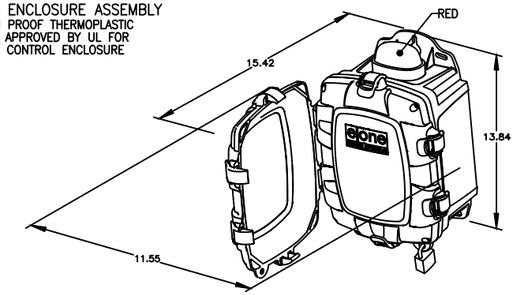

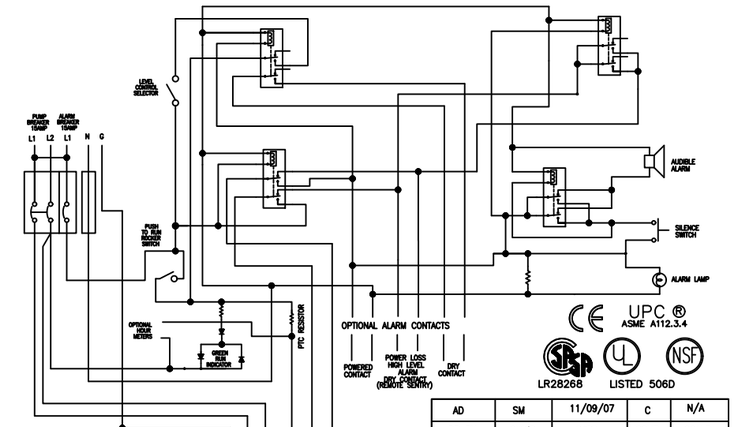

PIN	FUNCTION	2000S	EXTREME
1	MANUAL RUN	RED	BROWN
2	L1	BLACK	RED
3	L2	WHITE	BLACK
4	GND	GREEN	GRN/YEL
5	ALARM FEED	ORANGE	YELLOW
6	ALARM RETURN	BLUE	BLUE

CONTROL CABLE:
TYPE TC: DIRECT BURIAL, 12AWG, SIX CONDUCTOR

UPC ® ASME A112.3.4
LR28268 LISTED 506D

AD	SM	11/09/07	C	N/A
DR BY	CHK'D	DATE	ISSUE	SCALE

e one SEWER SYSTEMS

SIMPLEX SENTRY, 240V 60Hz.
DOUBLE POLE POWER

LM000326

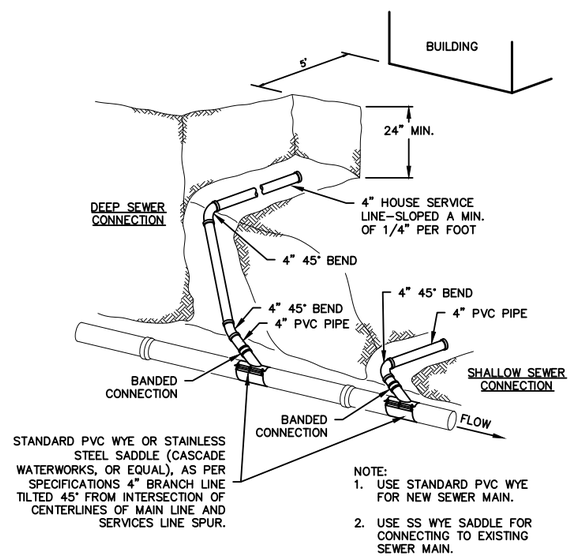

NOTE:
1. USE STANDARD PVC WYE FOR NEW SEWER MAIN.
2. USE SS WYE SADDLE FOR CONNECTING TO EXISTING SEWER MAIN.

7B **SEWER SERVICE CONNECTION**
NTS

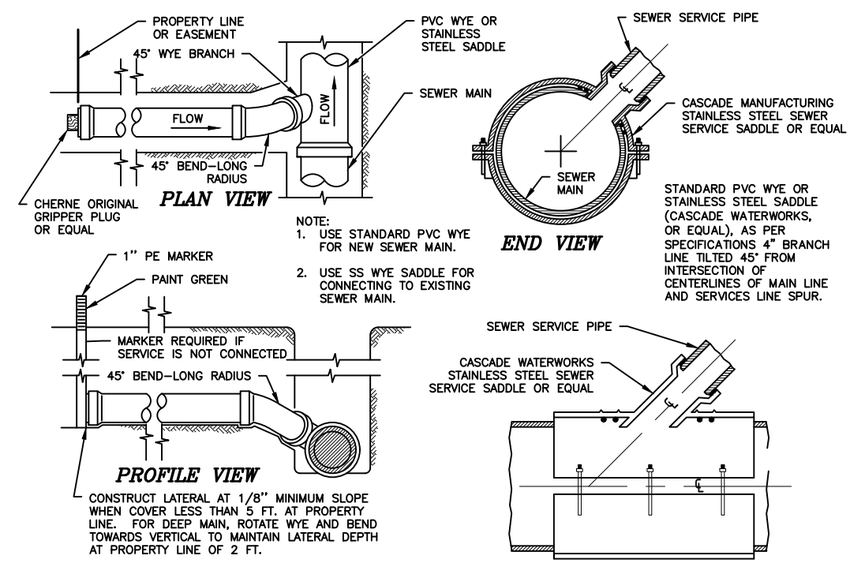

NOTE:
1. USE STANDARD PVC WYE FOR NEW SEWER MAIN.
2. USE SS WYE SADDLE FOR CONNECTING TO EXISTING SEWER MAIN.

SEWER SERVICE CONNECTION

SIDE VIEW – SEWER SERVICE SADDLE

7C **SEWER SERVICE CONNECTION**
NTS

DATE	REVISIONS	INIT.

INDIAN HEALTH SERVICE
OFFICE OF ENVIRONMENTAL HEALTH & ENGINEERING

SANITATION FACILITIES CONSTRUCTION
1700 CERRILLOS ROAD
SANTA FE, NM 87505
(505) 946-9570

INDIAN HEALTH SERVICE - SHF - 1955

Individual Water & Wastewater Facilities
San Ildefonso Pueblo
Construction Details Sheet 1
PUBLIC LAW 86-121
AL-23-C77 and AL-24-D33

DRAWN BY: T Slocum 12-24 FILE NAME:
CHECKED BY: LAYOUT NAME: Construction Details
APPROVED BY: PROJ ENG: T Slocum SCALE: as noted

PIPELINE AND SEPTIC TANK DETAILS

NOTES:

1. SPECIAL IMPORTED BEDDING AND HAUNCHING MATERIAL SHALL MEET THE CRITERIA OF THE UNIFIED SOILS CLASSIFICATION SYSTEM FOR GW, GP, SW OR SP SOILS.
2. ATTACH TRACER WIRE TO PIPE 3 TIMES PER 20' PIPE LENGTH, MINIMUM.
3. TRACER WIRE IS REQUIRED ON WATER MAINS, WATER SERVICE LINES AND SEWER FORCE MAINS.

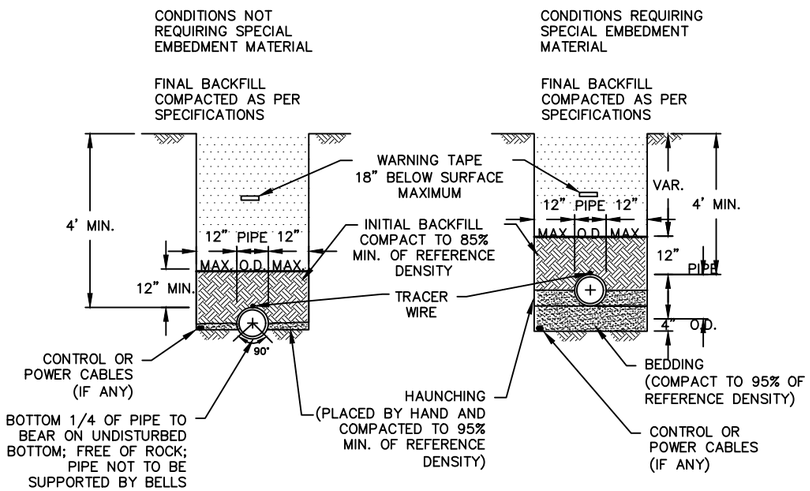

1A **TYPICAL TRENCH SECTION**
NTS

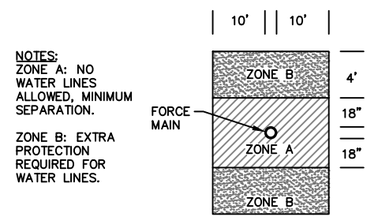

4G **WATER & SANITARY SEWER SEPARATION**
NTS

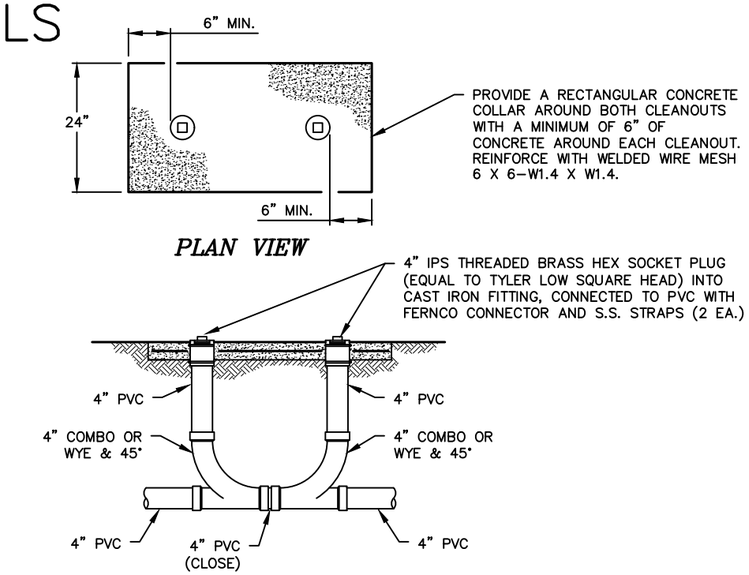

7A **SEWER SERVICE LINE CLEANOUTS**
NTS

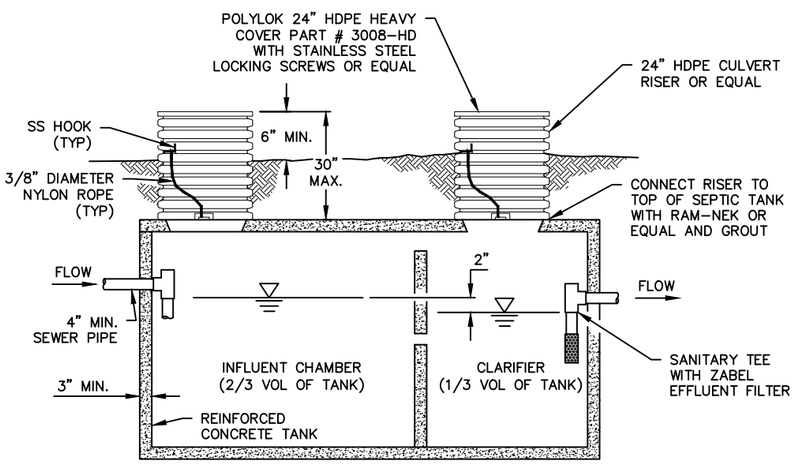

12A **SEPTIC TANK** NTS

(FOR SCHEDULE D)

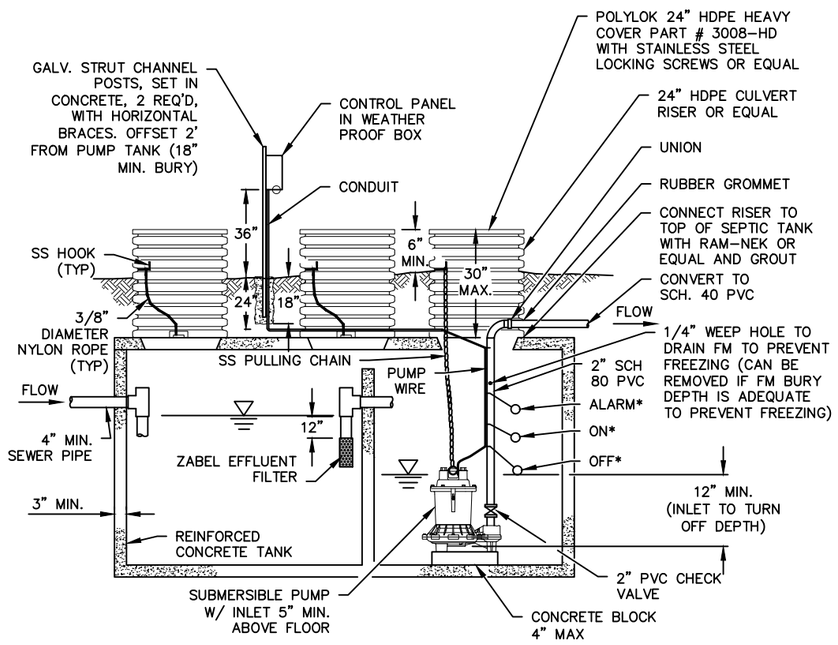

* NOTE:
FLOAT SETTINGS PER CONSTRUCTION DRAWING AND DOCUMENTS OR DETERMINED IN THE FIELD.

13B **COMBINATION SEPTIC & PUMP TANK**
NTS

(FOR SCHEDULE C)

DATE	REVISIONS	INIT.

INDIAN HEALTH SERVICE
OFFICE OF ENVIRONMENTAL HEALTH & ENGINEERING

SANITATION FACILITIES CONSTRUCTION
1700 CERRILLOS ROAD
SANTA FE, NM 87505
(505) 946-9570

INDIAN HEALTH SERVICE - PHS - 1955

Individual Water & Wastewater Facilities
San Ildefonso Pueblo
Construction Details Sheet 2
PUBLIC LAW 86-121
AL-23-C77 & AL-24-033

DRAWN BY: T Slocum 12-24
CHECKED BY:
APPROVED BY:
FILE NAME:
LAYOUT NAME: Construction Details Sheet 2
SCALE: as noted
PROJ ENG: T Slocum

SHEET 8 OF 9

DRAIN FIELD DETAILS

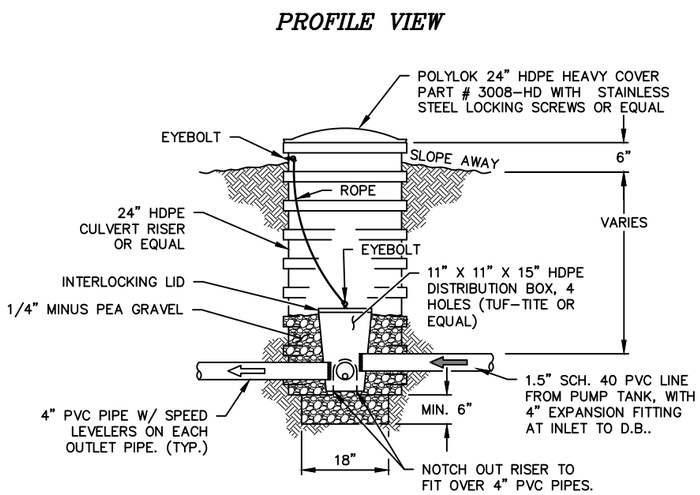

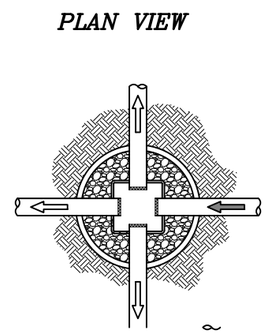

NOTE:
1. PROVIDE AT LEAST AS MANY OUTLETS AS THERE ARE DRAINFIELD LATERALS.
2. CAP OFF OUTLETS THAT ARE NOT NEEDED.
3. INSTALL A 1.5" TO 4" EXPANSION FITTING ON THE PUMP TANK EFFLUENT LINE AT INLET TO THE DISTRIBUTION BOX SO THAT FLOW TO THE CHAMBERS IS NON-PRESSURIZED.

12G1 *HPDE DISTRIBUTION BOX AND 24" RISER DETAIL*
NTS *3 OUTLET PIPES*

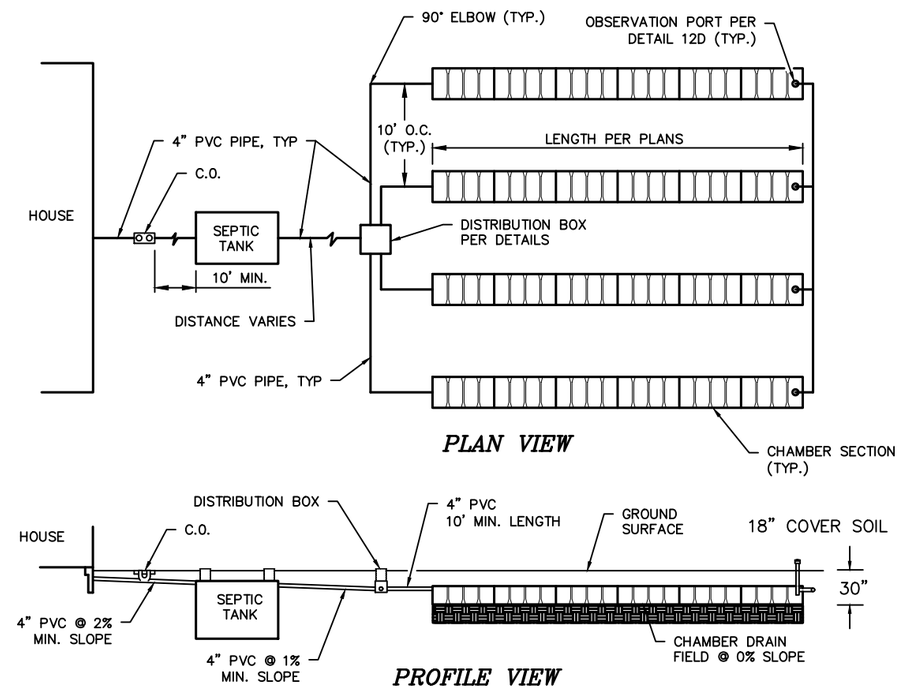

12B *CHAMBER DRAIN FIELD*
NTS

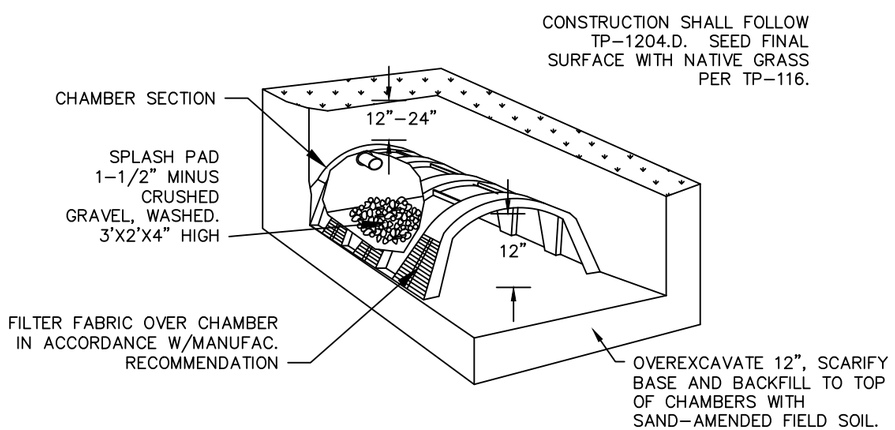

12C *ISOMETRIC VIEW - CHAMBER DRAIN FIELD*
NTS

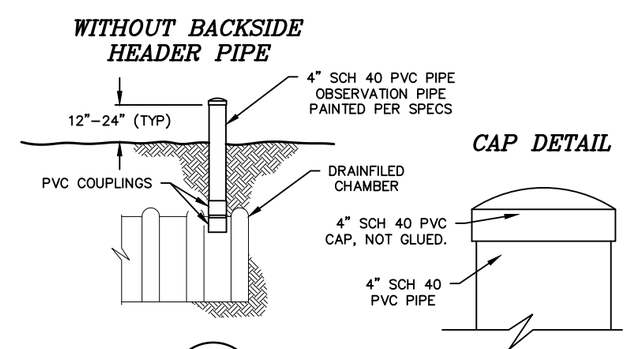

12H *OBSERVATION PIPE*
NTS

REVISIONS	INIT.
DATE	

INDIAN HEALTH SERVICE
OFFICE OF ENVIRONMENTAL HEALTH & ENGINEERING

SANITATION FACILITIES CONSTRUCTION
1700 CERRILLOS ROAD
SANTA FE, NM 87505
(505) 946-9570

INDIAN HEALTH SERVICE - 1955 - PHS

Individual Water & Wastewater Facilities
San Ildefonso Pueblo
Construction Details Sheet 3
PUBLIC LAW 86-121
AL-23-C77 & AL-24-D33

DRAWN BY: T Slocum 12-24
FILE NAME:
CHECKED BY:
LAYOUT NAME: Construction Details
APPROVED BY:
PROJ ENG: T Slocum
SCALE: as noted

SHEET 9 OF 9